EASY INSTALLATION

VDO Instruments

Optional Installation of Temperature Sender Part # 3288 into:
A: VW 1500 ccm and 1600 ccm engines.
B: VW 411 and Porsche 914/4 engines.

A: VW 1500 ccm and 1600 ccm engines

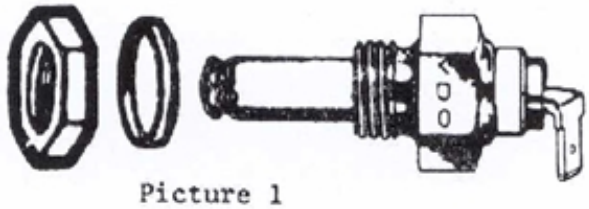

Picture 1

ASSEMBLY:

1. Disconnect ground wire at battery.
2. Drain motor oil.
3. Remove oil strainer cover, gasket and oil strainer (picture 2).
4. Drill 9/16" hole into oil strainer cover according to picture 2.
5. Remove all drilling chips.
6. Install sending unit as shown on picture 3 into strainer cover.
7. Replace gasket, if available use new one.
8. Fasten oil strainer, gasket and oil strainer cover (with already installed temperature sender) back into place. (picture 4).
9. Replace oil drain plug.
10. Refill motor oil.
11. Connect 16 or 18 gauge automotive wire from sender to terminal "G" of your gauge.
12. After wiring of the gauge is completed (see mounting instructions) reconnect ground wire of battery.

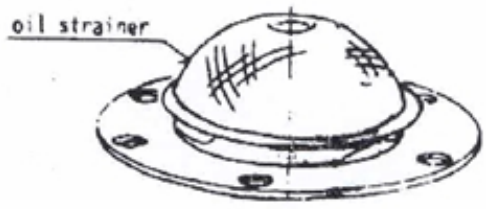

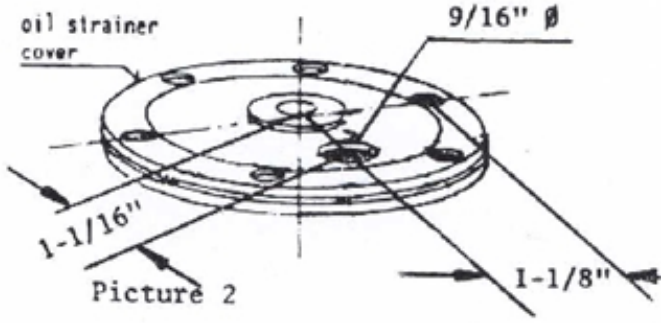

Picture 2

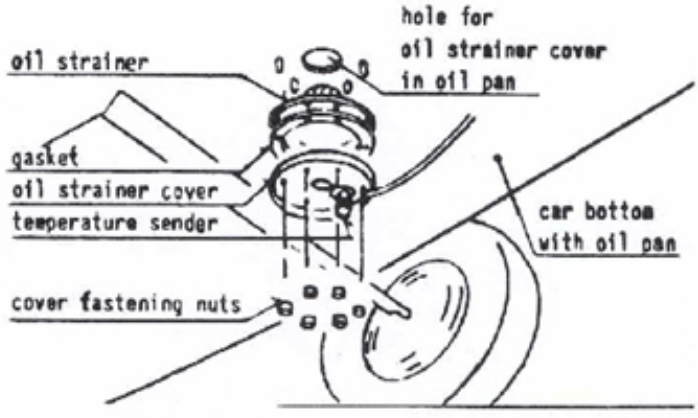

Picture 4

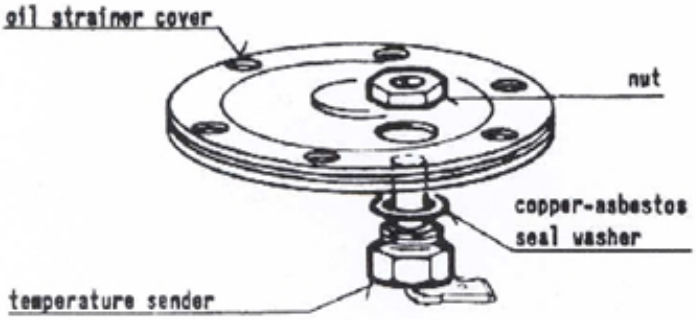

Picture 3

B: VW 411 and Porsche 914/4 engines.

ASSEMBLY:

1. Disconnect ground wire at battery.

2. Drain motor oil.

3. Remove oil pan cover and gasket. Picture 1.

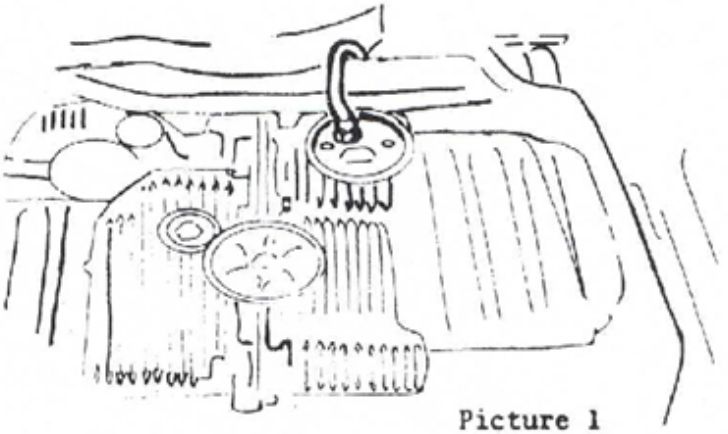

Picture 1

4. Drill 9/16" hole into oil pan cover, according to Picture 2

5. Remove all drilling chips.

6. Install sending unit with washer and nut.

7. Fasten oil pan cover with already installed temperature sender and gasket.

8. Replace oil drain plug.

9. Refill motor oil.

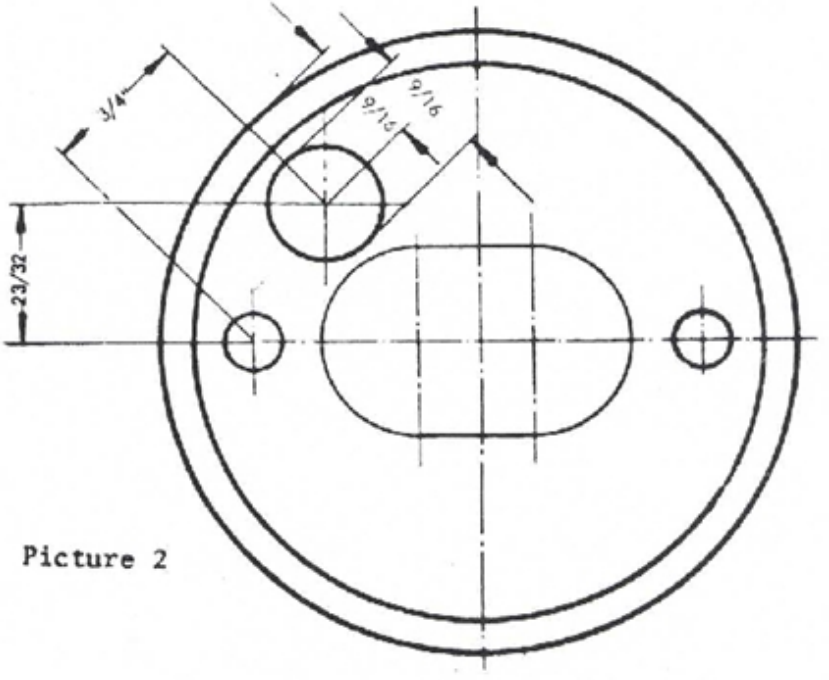

Picture 2

10. Connect 16 or 18 gauge automotive wire from sender to terminal "G" of your gauge.

11. Complete wiring of the gauge as shown in picture 3 and reconnect ground wire of battery.

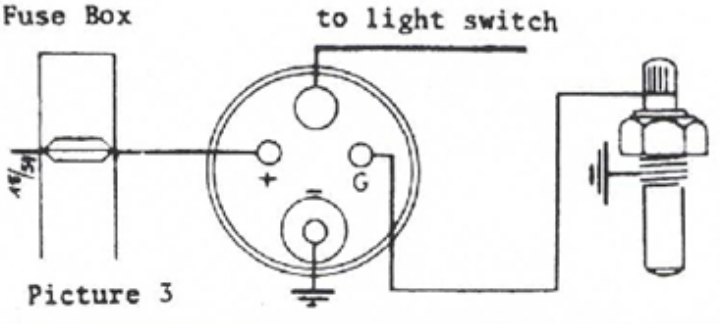

Picture 3